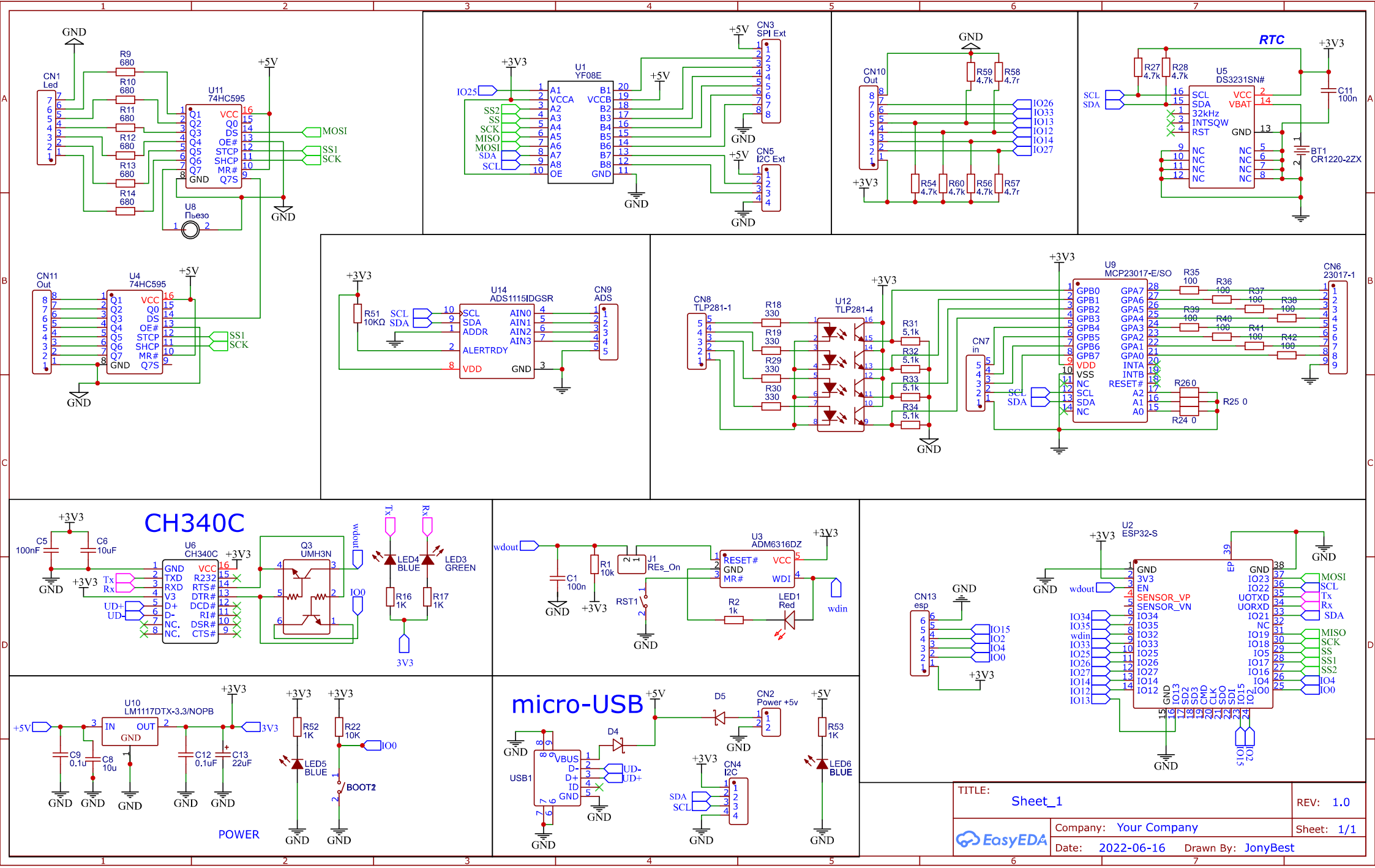

CN1 Led
R9 680
R10 680
R11 680
R12 680
R13 680
R14 680
U11 74HC595
U8 Пьезо
CN11 Out
U4 74HC595
U1 YF08E
CN3 SPI Ext
CN5 I2C Ext
CN10 Out
R59 4.7k
R58 4.7r
R54 4.7k
R60 4.7k
R56 4.7k
R57 4.7r
RTC
U5 DS3231SN#
R27 4.7k
R28 4.7k
C11 100n
BT1 CR1220-2ZX
U14 ADS1115IDGSR
CN9 ADS
R51 10KΩ
CN8 TLP281-1
U12 TLP281-4
R18 330
R19 330
R29 330
R30 330
R31 5.1k
R32 5.1k
R33 5.1k
R34 5.1k
CN7 in
U9 MCP23017-E/SO
CN6 23017-1
R35 100
R36 100
R37 100
R38 100
R39 100
R40 100
R41 100
R42 100
R26 0
R25 0
R24 0
CH340C
C5 100nF
C6 10uF
U6 CH340C
Q3 UMH3N
LED4 BLUE
LED3 GREEN
R16 1K
R17 1K
U3 ADM6316DZ
C1 100n
R1 10k
J1 REs_On
RST1
R2 1k
LED1 Red
U2 ESP32-S
CN13 esp
U10 LM1117DTX-3.3/NOPB
C9 0.1u
C8 10u
C12 0.1uF
C13 22uF
R52 1K
R22 10K
LED5 BLUE
BOOT2
POWER
micro-USB
USB1
D4
D5
CN2 Power +5v
R53 1K
LED6 BLUE
CN4 I2C
TITLE: Sheet_1
REV: 1.0
Company: Your Company
Sheet: 1/1
Date: 2022-06-16
Drawn By: JonyBest
EasyEDA